General-purpose Relay
G2RS-(S)

Slim and Space-saving Power Plug-in Relay

- Lockable test button models now available.
- Built-in mechanical operation indicator.
- Provided with nameplate.
- AC type is equipped with a coil-disconnection self-diagnostic function (LED type).
- High switching power (1-pole: 10 A).
- Environment-friendly (Cd, Pb free).
- Wide range of Sockets also available.
- RoHS Compliant.

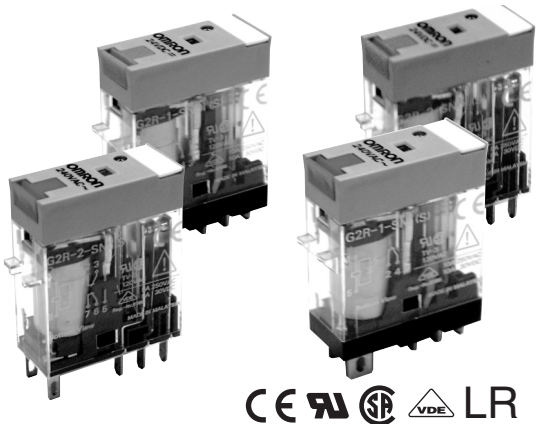

Model Number Structure

■ Model Number Legend

G2R□-□□□-□□-□(S)
1 2 3 4 5 6 7

1. **Relay Function**
   Blank: General-purpose
2. **Number of Poles**
   1: 1 pole
   2: 2 poles
3. **Contact Form**
   Blank: SPDT
4. **Contact Type**
   Blank: Single
5. **Terminals**
   S: Plug-in
6. **Classification**
   Blank: General-purpose
   N: LED indicator
   D: Diode
   ND: LED indicator and diode
   NI: LED indicator with test button
   NDI: LED indicator and diode with test button
7. **Rated Coil Voltage**

Ordering Information

■ List of Models

Classification		Enclosure rating	Coil ratings	Contact form/Model	
				SPDT	DPDT
Plug-in terminal	General-purpose	Unsealed	AC/DC	**G2R-1-S**	**G2R-2-S**
	LED indicator			**G2R-1-SN**	**G2R-2-SN**
	LED indicator with test button			**G2R-1-SNI**	**G2R-2-SNI**
	Diode		DC	**G2R-1-SD**	**G2R-2-SD**
	LED indicator and diode			**G2R-1-SND**	**G2R-2-SND**
	LED indicator and diode with test button			**G2R-1-SNDI**	**G2R-2-SNDI**

Note: When ordering, add the rated coil voltage and "(S)" to the model number. Rated coil voltages are given in the coil ratings table.
Example: G2R-1-S DC12 (S) ——— New model
└——— Rated coil voltage

■ Accessories (Order Separately)

Connecting Sockets

Applicable Relay model	Track/surface-mounting Socket		Back-mounting Socket	
	Screwless clamp terminal (See note.)	Screw terminal	Terminals	Model
1 pole G2R-1-S(N)(D)(ND)(NI)(NDI)	**P2RF-05-S + P2CM-S**	**P2RF-05-E** **P2RF-05**	PCB terminals	**P2R-05P, P2R-057P**
			Solder terminals	**P2R-05A**
2 poles G2R-2-S(N)(D)(ND)(NI)(NDI)	**P2RF-08-S + P2CM-S**	**P2RF-08-E** **P2RF-08**	PCB terminals	**P2R-08P, P2R-087P**
			Solder terminals	**P2R-08A**

Note: 1. Use of P2CM Clips are optional. However, use of the P2CM Clip & Release Lever is recommended to ensure stable mounting.
2. "-E" models are of finger-safe product construction. Round terminals cannot be used. Use Y-shaped terminals.

Accessories for Screwless Clamp Terminal Socket (Option)

Name	Model	
Clip & Release Lever	**P2CM-S**	
Nameplate	**R99-11 Nameplate for MY**	
Socket Bridge	**P2RM-SR (for AC),**	**P2RM-SB (for DC)**

Mounting Tracks

Applicable Socket	Description		Model
Mounting track and accessories	Mounting track	50 cm (ℓ) x 7.3 mm (t) 1 m (ℓ) x 7.3 mm (t) 1 m (ℓ) x 16 mm (t)	**PFP-50N** **PFP-100N** **PFP-100N2**
	End plate		**PFP-M**
	Spacer		**PFP-S**
Mounting plate*	Back-connecting Sockets		**P2R-P**

*Used to mount several P2R-05A and P2R-08A Connecting Sockets side by side.

Specifications

■ Coil Ratings

Rated voltage		Rated current*		Coil resistance*	Coil inductance (H) (ref. value)		Must operate voltage	Must release voltage	Max. voltage	Power consumption (approx.)
		50 Hz	60 Hz		Armature OFF	Armature ON	% of rated voltage			
AC	24 V	43.5 mA	37.4 mA	253 Ω	0.81	1.55	80% max.	30% min.	110%	0.9 VA at 60 Hz
	110 V	9.5 mA	8.2 mA	5,566 Ω	13.33	26.83				
	120 V	8.6 mA	7.5 mA	7,286 Ω	16.13	32.46				
	230 V	4.4 mA	3.8 mA	27,172 Ω	72.68	143.90				
	240 V	3.7 mA	3.2 mA	30,360 Ω	90.58	182.34				

Rated voltage		Rated current*	Coil resistance*	Coil inductance (H) (ref. value)		Must operate voltage	Must release voltage	Max. voltage	Power consumption (approx.)
				Armature OFF	Armature ON	% of rated voltage			
DC	6 V	87.0 mA	69 Ω	0.25	0.48	70% max.	15% min.	110%	0.53 W
	12 V	43.2 mA	278 Ω	0.98	2.35				
	24 V	21.6 mA	1,113 Ω	3.60	8.25				
	48 V	11.4 mA	4,220 Ω	15.2	29.82				

* The rated current and coil resistance are measured at a coil temperature of 23°C with tolerances of ±10%.

■ Contact Ratings

Number of poles	1 pole		2 poles	
Load	Resistive load (cosϕ = 1)	Inductive load (cosϕ = 0.4; L/R = 7 ms)	Resistive load (cosϕ = 1)	Inductive load (cosϕ = 0.4; L/R = 7 ms)
Rated load	10 A at 250 VAC; 10 A at 30 VDC	7.5 A at 250 VAC; 5 A at 30 VDC	5 A at 250 VAC; 5 A at 30 VDC	2 A at 250 VAC; 3 A at 30 VDC
Rated carry current	10 A		5 A	
Max. switching voltage	440 VAC, 125 VDC		380 VAC, 125 VDC	
Max. switching current	10 A		5 A	
Max. switching capacity	2,500 VA, 300 W	1,875 VA, 150 W	1,250 VA, 150 W	500 VA, 90 W
Minimum permissible load	100 mA at 5 VDC		10 mA at 5 VDC	

Note: P level: $\lambda_{60} = 0.1 \times 10^{-6}$/operation

■ Characteristics

Item	1 pole	2 poles
Contact resistance	100 mΩ max.	
Operate (set) time	15 ms max.	
Release (reset) time	AC: 10 ms max.; DC: 5 ms max. (w/built-in diode: 20 ms max.)	AC: 15 ms max.; DC: 10 ms max. (w/built-in diode: 20 ms max.)
Max. operating frequency	Mechanical: 18,000 operations/hr Electrical: 1,800 operations/hr (under rated load)	
Insulation resistance	1,000 MΩ min. (at 500 VDC)	
Dielectric strength	5,000 VAC, 50/60 Hz for 1 min between coil and contacts*; 1,000 VAC, 50/60 Hz for 1 min between contacts of same polarity	5,000 VAC, 50/60 Hz for 1 min between coil and contacts*; 3,000 VAC, 50/60 Hz for 1 min between contacts of different polarity 1,000 VAC, 50/60 Hz for 1 min between contacts of same polarity
Vibration resistance	Destruction: 10 to 55 to 10 Hz, 0.75 mm single amplitude (1.5 mm double amplitude) Malfunction: 10 to 55 to 10 Hz, 0.75 mm single amplitude (1.5 mm double amplitude)	
Shock resistance	Destruction: 1,000 m/s^2 Malfunction: 200 m/s^2 when energized; 100 m/s^2 when not energized	
Service life	Mechanical: AC coil: 10,000,000 operations min.; DC coil: 20,000,000 operations min. (at 18,000 operations/hr) Electrical: 100,000 operations min. (at 1,800 operations/hr under rated load) (DC coil type)	
Ambient temperature	Operating: –40°C to 70°C (with no icing or condensation)	
Ambient humidity	Operating: 5% to 85%	
Weight	Approx. 21 g	

Note: Values in the above table are the initial values.
*4,000 VAC, 50/60 Hz for 1 minute when the P2R-05A or P2R-08A Socket is used.

■ Approved Standards

UL Recognized (File No. E41643) - - Ambient Temp. = 40°C

Model	Contact form	Coil ratings	Contact ratings	Cycles
G2R-1-S	SPDT	5 to 110 VDC 5 to 240 VAC	10 A, 30 VDC (resistive) 10 A, 250 VAC (general use) TV-3 (NO contact only)	6 x 10^3
G2R-2-S	DPDT		5 A, 30 VDC (resistive) 5 A, 250 VAC (general use) TV-3 (NO contact only)	6 x 10^3

IEC/VDE (EN61810)

Contact form	Coil ratings	Contact ratings	Cycles
1 pole	6, 12, 24, 48 VDC 24, 110, 120, 230, 240 VAC	5 A, 440 VAC (cosϕ = 1.0) 10 A, 250 VAC (cosϕ = 1.0) 10 A, 30 VDC (0 ms)	100 x 10^3
2 poles	6, 12, 24, 48 VDC 24, 110, 120, 230, 240 VAC	5 A, 250 VAC (cosϕ =1.0) 5 A, 30 VDC (0 ms)	100 x 10^3

CSA Certified (File No. LR31928)

Model	Contact form	Coil ratings	Contact ratings	Cycles
G2R-1-S	SPDT	5 to 110 VDC 5 to 240 VAC	10 A, 30 VDC (resistive) 10 A, 250 VAC (general use) TV-3 (NO contact only)	6 x 10^3
G2R-2-S	DPDT		5 A, 30 VDC (resistive) 5 A, 250 VAC (general use) TV-3 (NO contact only)	6 x 10^3

LR

Number of poles	Coil ratings	Contact ratings	Cycles
1 pole	5 to 110 VDC 5 to 240 VDC	10 A, 250 VAC (general use) 7.5 A, 250 VAC (PF0.4) 10 A, 30 VDC (resistive) 5A, 30VDC (L/R=7ms)	100 x 10^3
2 poles	5 to 110 VDC 5 to 240 VDC	5 A, 250 VAC (general use) 2 A, 250 VAC (PF0.4) 5 A, 30 VDC (resistive) 3A, 30VDC (L/R=7ms)	100 x 10^3

Engineering Data

■ Maximum Switching Capacity

Plug-in Relays

G2R-1-S

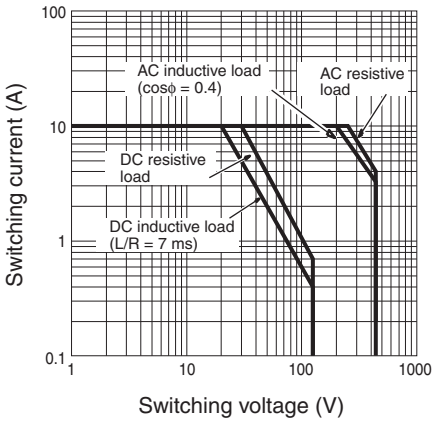

G2R-2-S

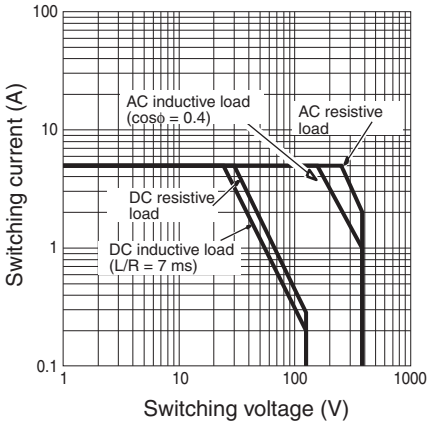

■ Electrical Service Life

Plug-in Relays

G2R-1-S

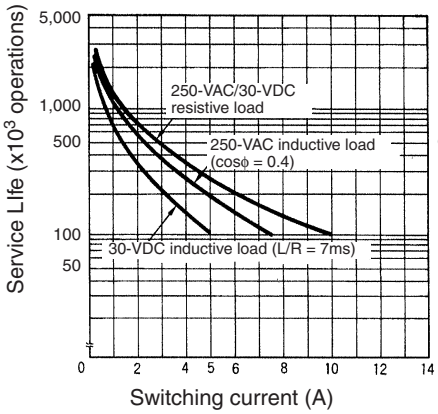

G2R-2-S

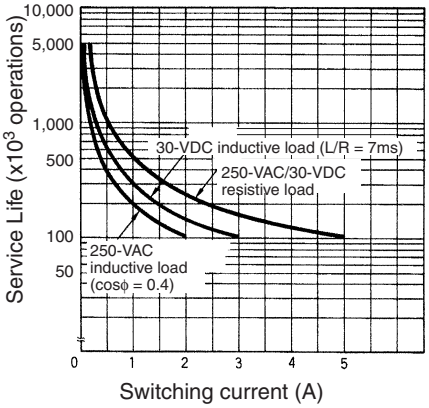

Ambient Temperature vs. Maximum Coil Voltage

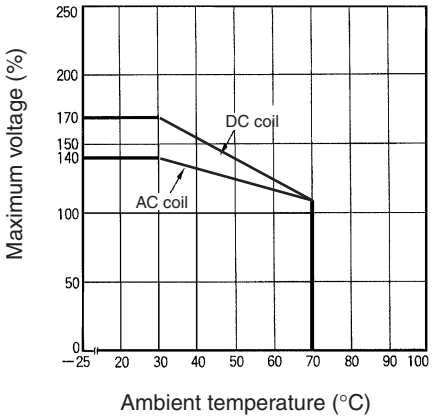

Note: The maximum voltage refers to the maximum value in a varying range of operating power voltage, not a continuous voltage.

Dimensions

Unit: mm (inch)

■ Relays with Plug-in Terminals

SPDT Relays

G2R-1-S, G2R-1-SN, G2R-1-SNI
G2R-1-SD, G2R-1-SND, G2R-1-SNDI

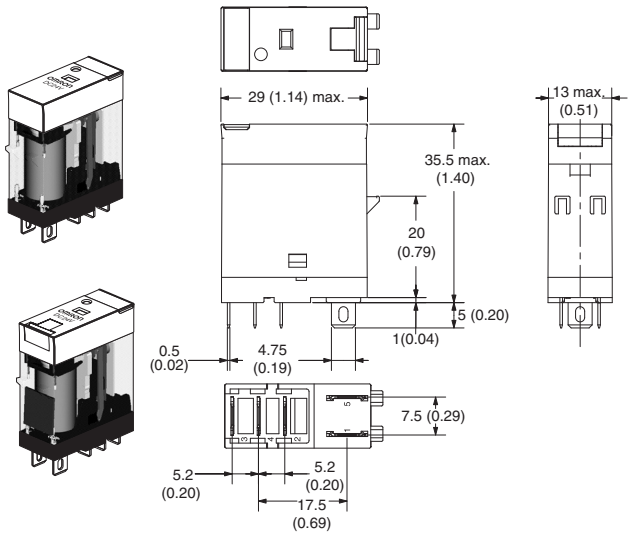

Terminal Arrangement/Internal Connections (Bottom View)

G2R-1-S

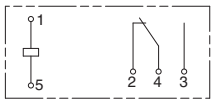

G2R-1-SD (DC)

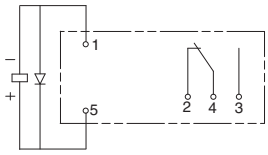

G2R-1-SN, G2R-1-SNI (AC)

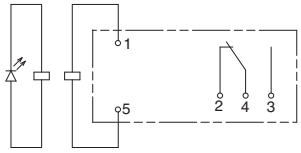

G2R-1-SN, G2R-1-SNI (DC)

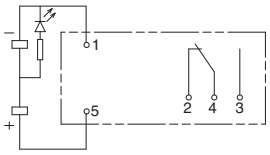

G2R-1-SND, G2R-1-SNDI (DC)

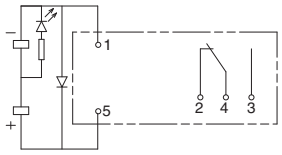

DPDT Relays

G2R-2-S, G2R-2-SN, G2R-2-SNI
G2R-2-SD, G2R-2-SND, G2R-2-SNDI

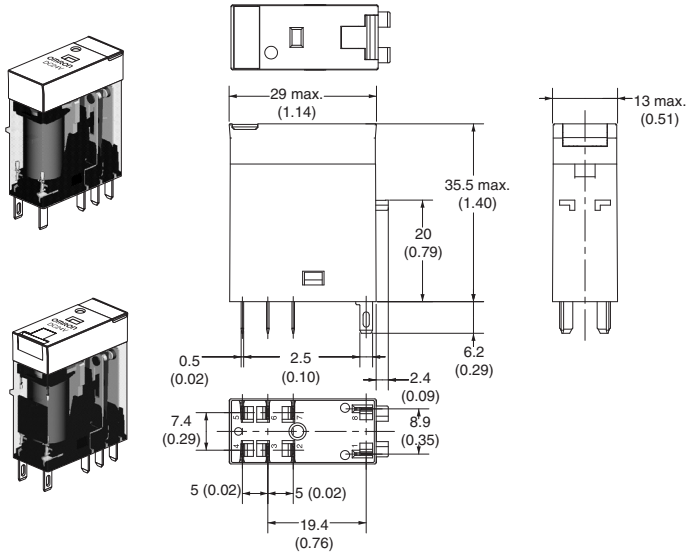

Terminal Arrangement/Internal Connections (Bottom View)

G2R-2-S

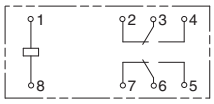

G2R-2-SD (DC)

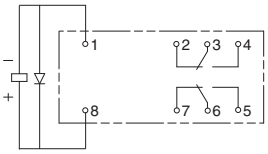

G2R-2-SN, G2R-2-SNI (AC)

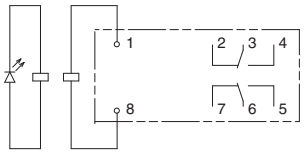

G2R-2-SN, G2R-2-SNI (DC)

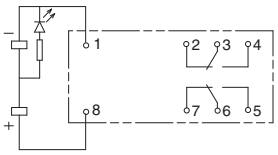

G2R-2-SND, G2R-2-SNDI (DC)

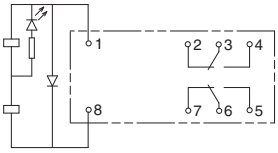

Track/Surface Mounting Sockets

P2RF-05-S

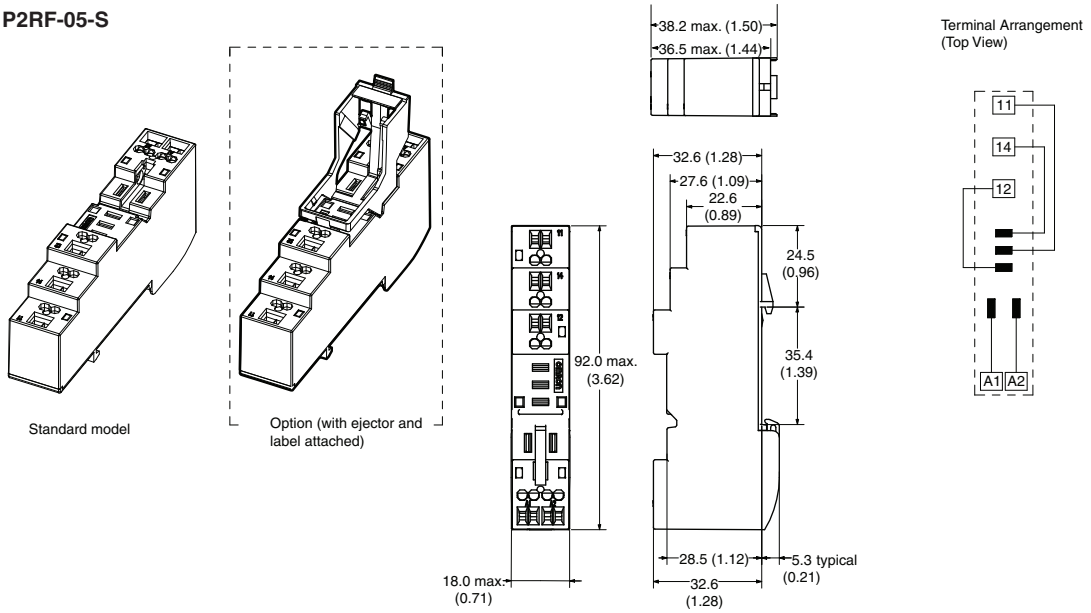

P2RF-08-S

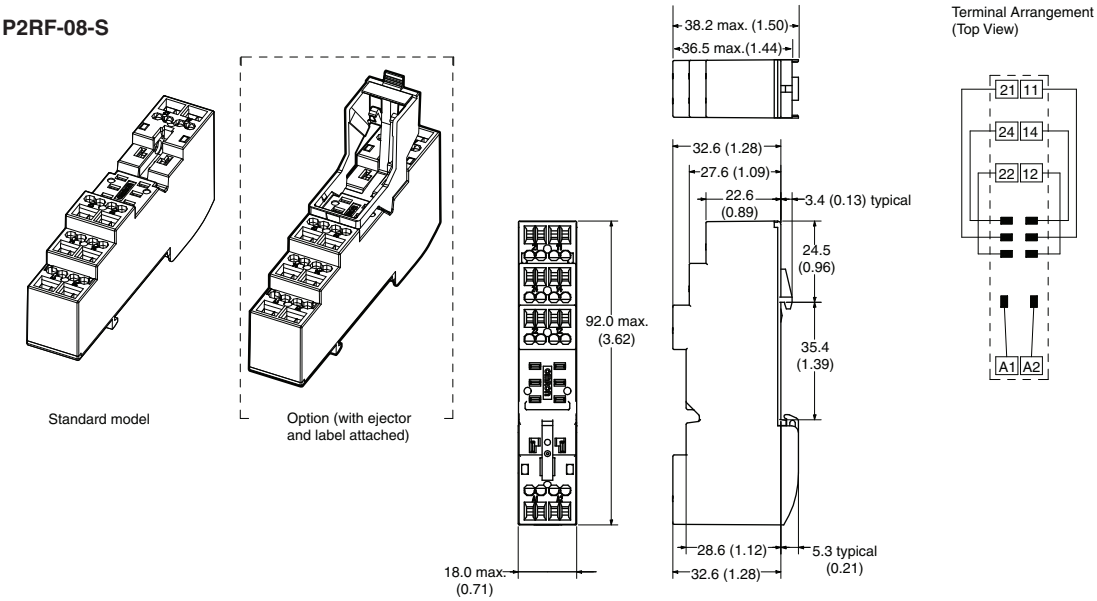

Accessories for P2RF-□-S

Socket Bridge

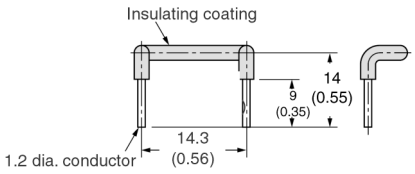

Note: The color of insulating coating indicates power type.

Model	Power	Color
P2RM-SR	AC	Red
P2RM-SB	DC	Blue

Clip and Release Lever

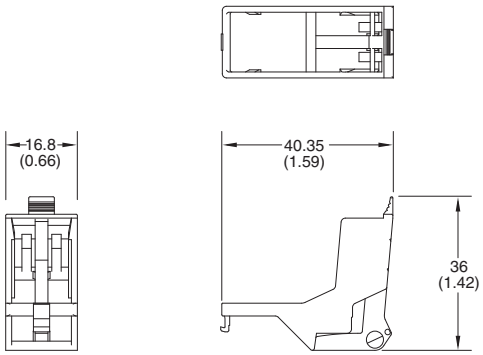

P2RF-05-E

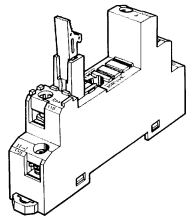

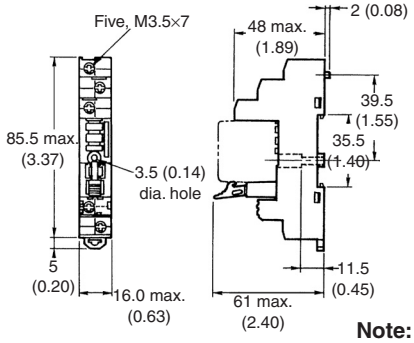

Terminal Arrangement (Top View)

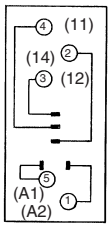

Mounting Holes (for Surface Mounting)

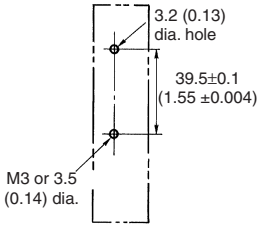

Note: Pin numbers in parentheses apply to DIN standard.

P2RF-08-E

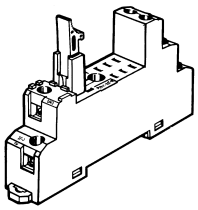

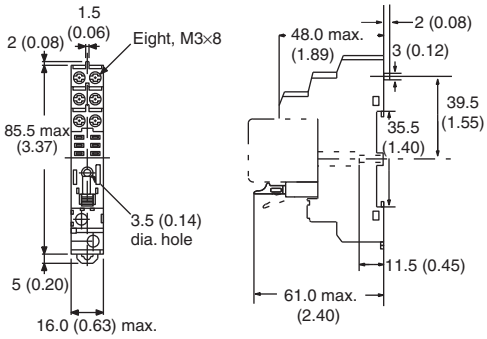

Terminal Arrangement (Top View)

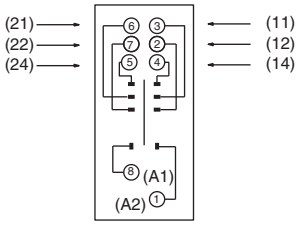

Mounting Holes (for Surface Mounting)

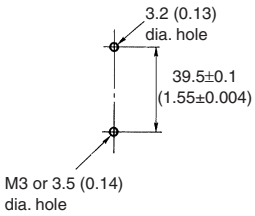

P2RF-05

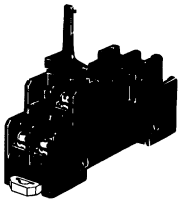

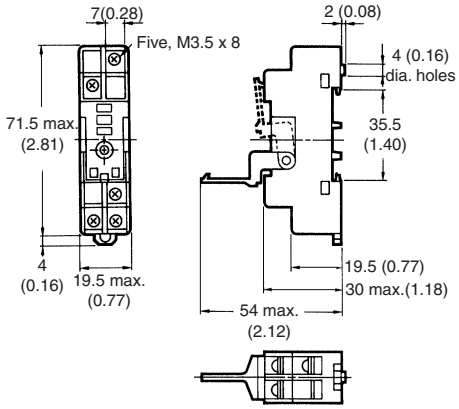

Terminal Arrangement (Top View)

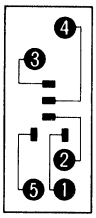

Mounting Holes (for Surface Mounting)

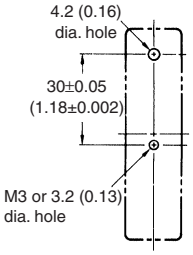

P2RF-08

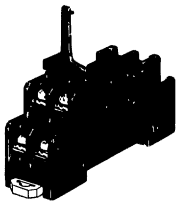

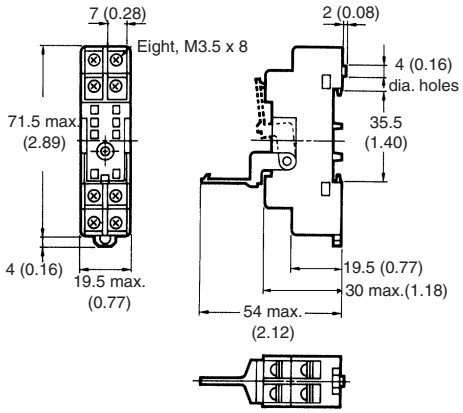

Terminal Arrangement (Top View)

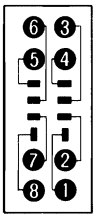

Mounting Holes (for Surface Mounting)

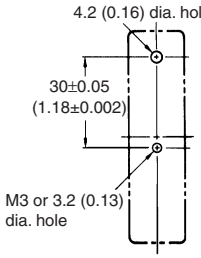

Mounting Height of Relay with Track/Surface Mounting Sockets

P2RF-□

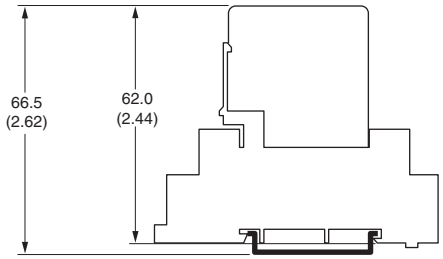

P2RF-□-E

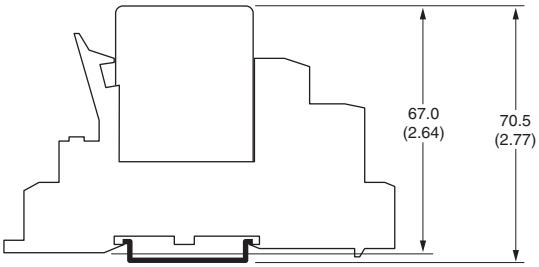

P2RF-□-S

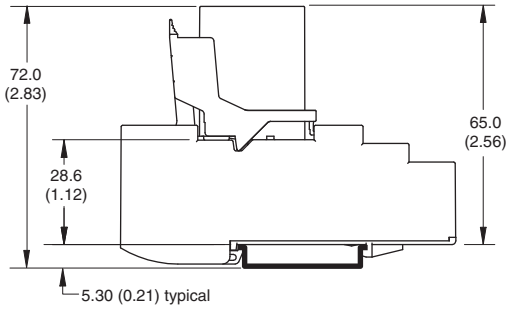

Back-connecting Sockets

P2R-05P (1-pole)

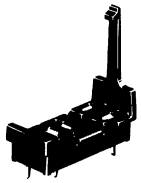

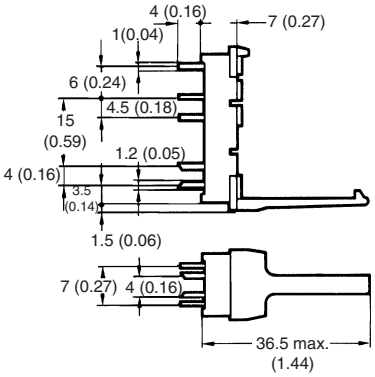

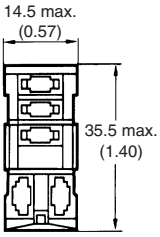

Terminal Arrangement (Bottom View)

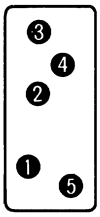

Mounting Holes

Tolerance: ±0.1

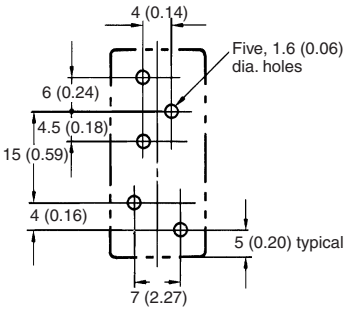

P2R-08P (2-pole)

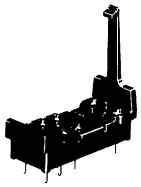

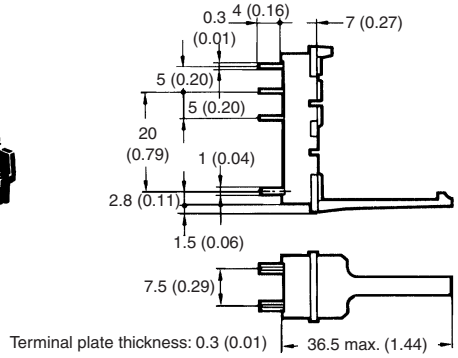

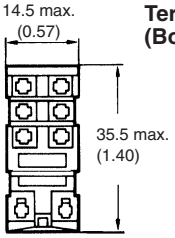

Terminal Arrangement (Bottom View)

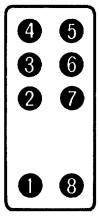

Mounting Holes

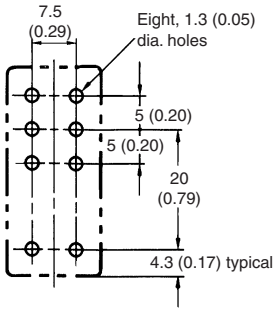

P2R-05A (1-pole)

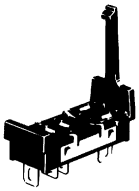

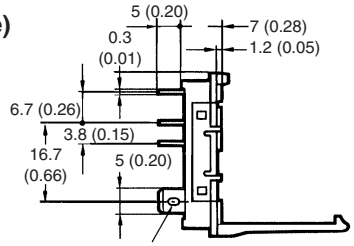

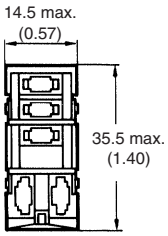

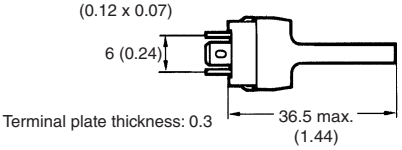

Terminal Arrangement (Bottom View)

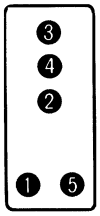

Panel Cutout

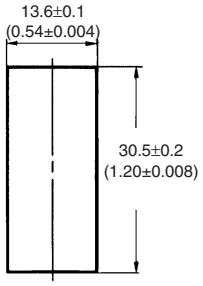

Recommended thickness of the panel is 1.6 to 2.0 mm

P2R-08A (2-pole)

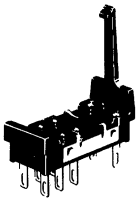

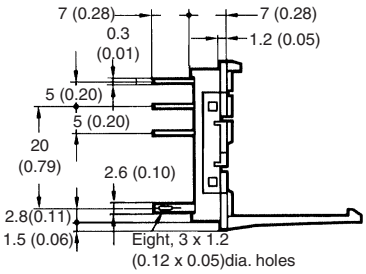

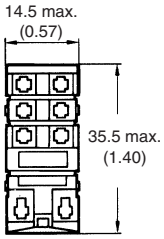

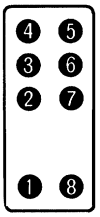

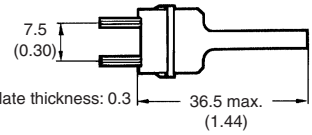

P2R-057P

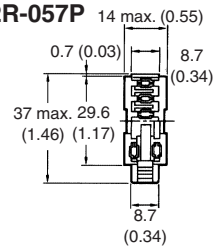

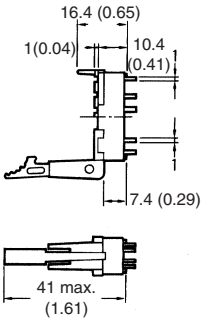

Terminal Arrangement (Bottom View)

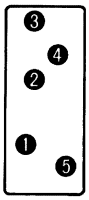

Mounting Holes

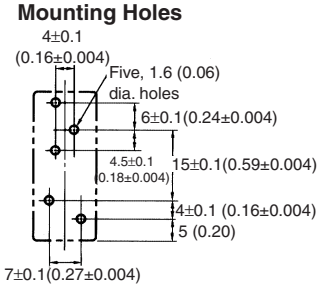

P2R-087P

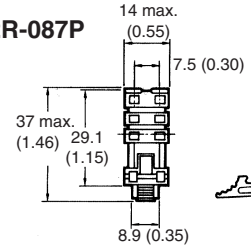

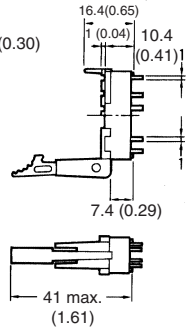

Terminal Arrangement (Bottom View)

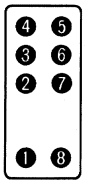

Mounting Holes

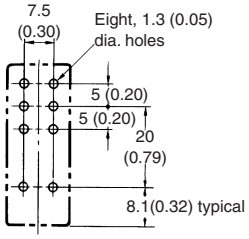

Mounting Height of Relay with Back-connecting Sockets

G2R-□P

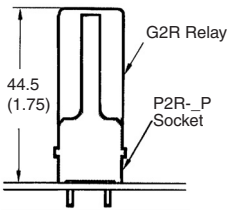

G2R-□A

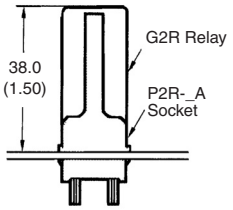

G2R-□7P

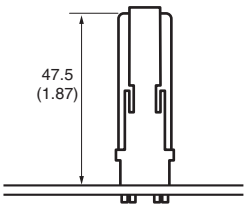

Mounting Tracks

PFP-100N, PFP-50N

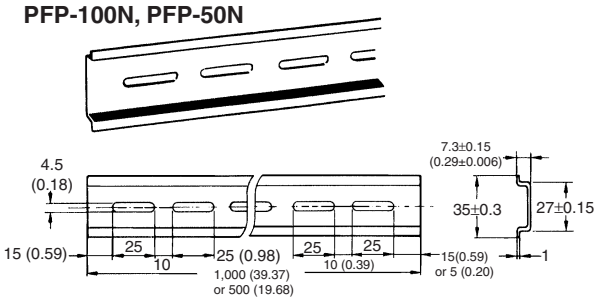

It is recommended to use a panel 1.6 to 2.0 mm thick.

PFP-100N2

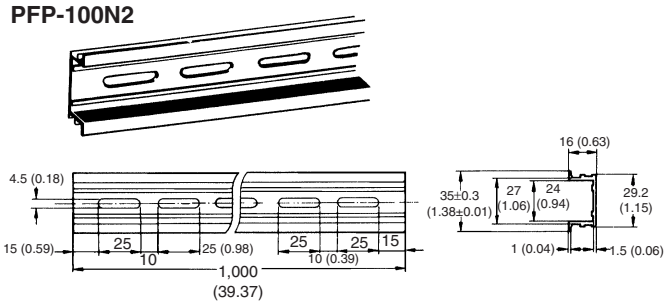

End Plate

PFP-M

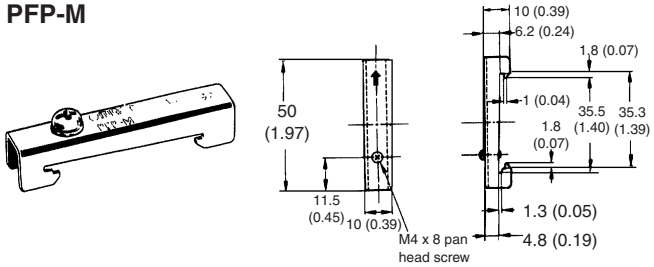

Spacer

PFP-S

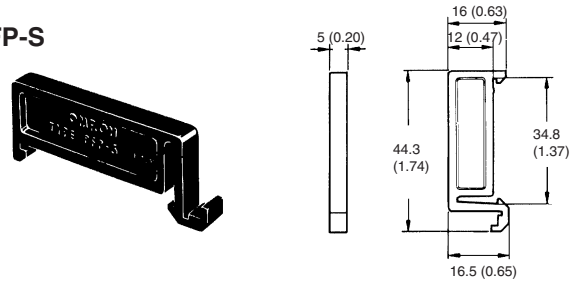

Precautions

⚠ CAUTION

Do not use the test button for any purpose other than testing. Be sure not to touch the test button accidentally as this will turn the contacts ON. Before using the test button, confirm that circuits, the load, and any other connected item will operate safely.

⚠ CAUTION

Check that the test button is released before turning ON relay circuits.

⚠ CAUTION

If the test button is pulled out too forcefully, it may bypass the momentary testing position and go straight into the locked position.

⚠ CAUTION

Use an insulated tool when you operate the test button.

Precautions for P2RF-□-S Connection

- Do not move the screwdriver up, down, or from side to side while it is inserted in the hole. Doing so may cause damage to internal components (e.g., deformation of the clamp spring or cracks in the housing) or cause deterioration of insulation.
- Do not insert the screwdriver at an angle. Doing so may break the side of the socket and result in a short-circuit.

MEMO

All sales are subject to Omron Electronic Components LLC standard terms and conditions of sale, which can be found at http://www.components.omron.com/components/web/webfiles.nsf/sales_terms.html

ALL DIMENSIONS SHOWN ARE IN MILLIMETERS.
To convert millimeters into inches, multiply by 0.03937. To convert grams into ounces, multiply by 0.03527.

OMRON®

OMRON ELECTRONIC COMPONENTS LLC
55 E. Commerce Drive, Suite B
Schaumburg, IL 60173
847-882-2288

OMRON ON-LINE
Global - http://www.omron.com
USA - http://www.components.omron.com

Cat. No. X301-E-1b 09/11 Specifications subject to change without notice Printed in USA